SCALE 10%
OF ACTUAL SIZE

Arch - Airflow

Constant Air w/ Internal Blower

20 ft x 13 ft 39”D

Adobe Illustrator (Mac or PC) - convert your fonts to outlines and save as native Illustrator format (ai). Artwork should be in only vector format. Artwork should be in CMYK.

Adobe Photoshop (Mac or PC) - rasterize your fonts and save files as .psd (if you have layers) (or need transparency). Will also accept Photoshop EPS formats. Image resolution should be 150 dpi at 100% size the artwork is to be printed at. (or 300 dpi and 1/2 the actual size to be printed)

- All fonts need to be outlines in order to avoid any defaulted text
- Digital imaging will be output in CMYK process
- Use ZIP compression for multiple files
- Please make sure to embed any and all images used.
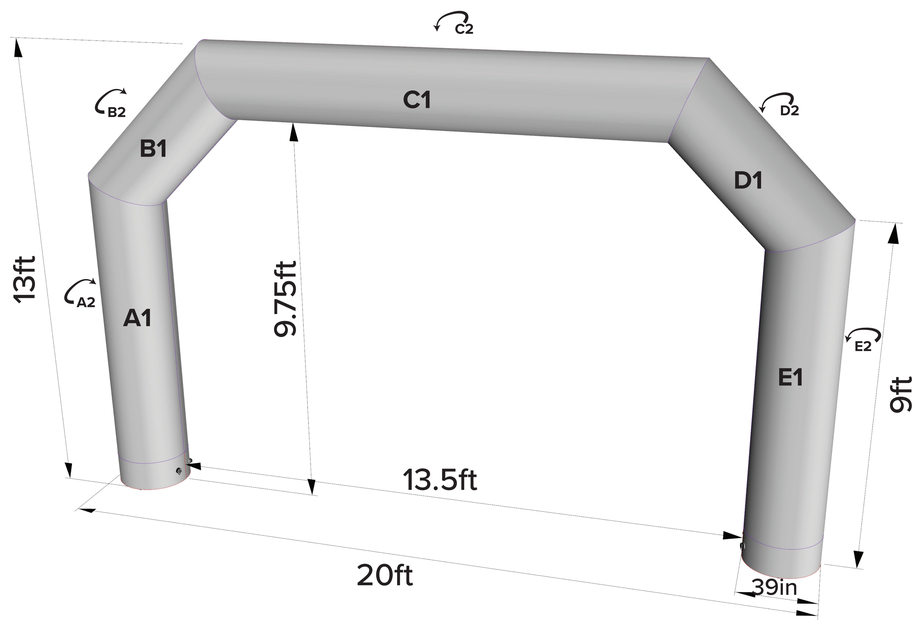
☐ Trim Line ☐ Safe Guide ☐ Bleed ☐ Sewing line *sewing line can be adjusted, *extra fees may apply*